REVISION HISTORY					
ECO	ZONE	REV.	DESCRIPTION	DATE	APPR'D
		01	PRELIMINARY RELEASE	7/28/2016	MTS
		A	RELEASE	8/22/2016	MTS
		B	UPDATED PAGE DESCRIPTION BOX	12/2/2016	MTS

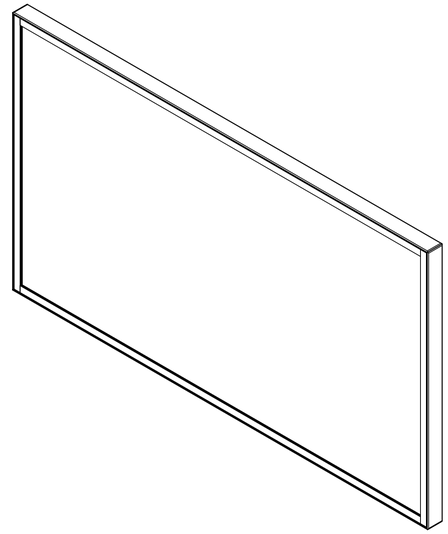

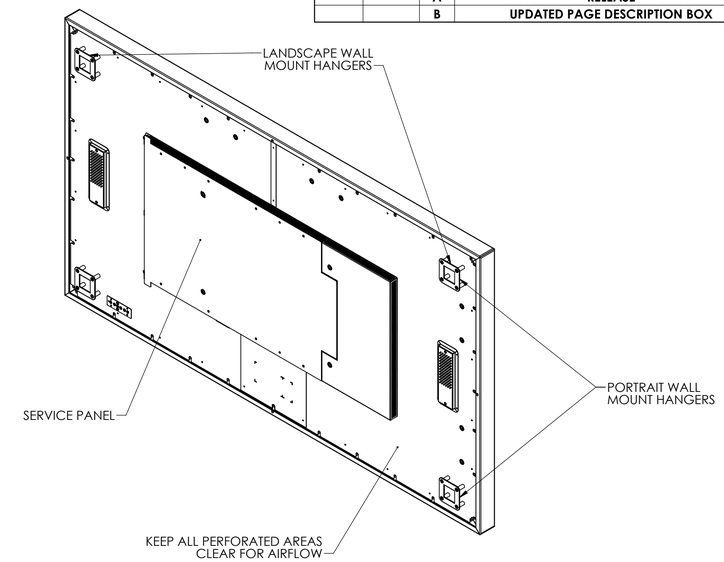

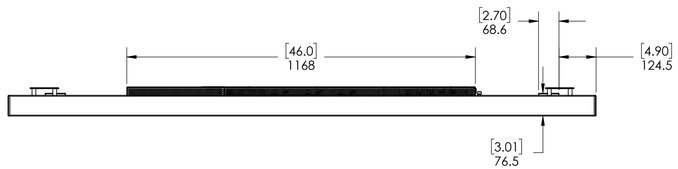

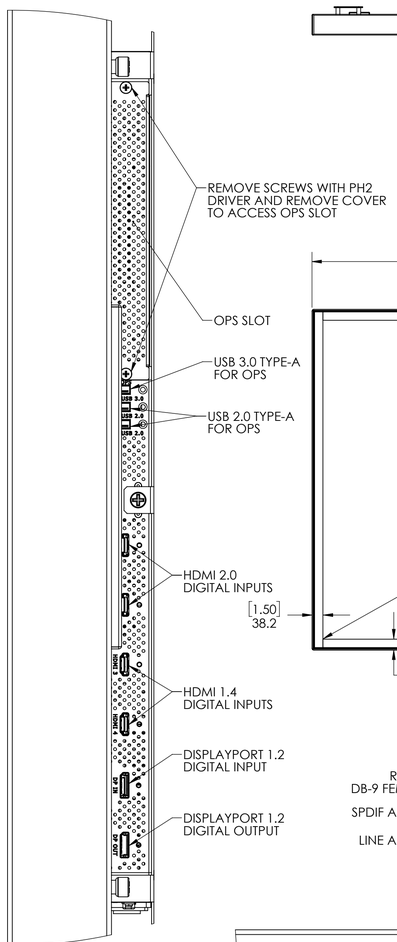

DETAIL B
SCALE 1 : 2
I/O PANEL

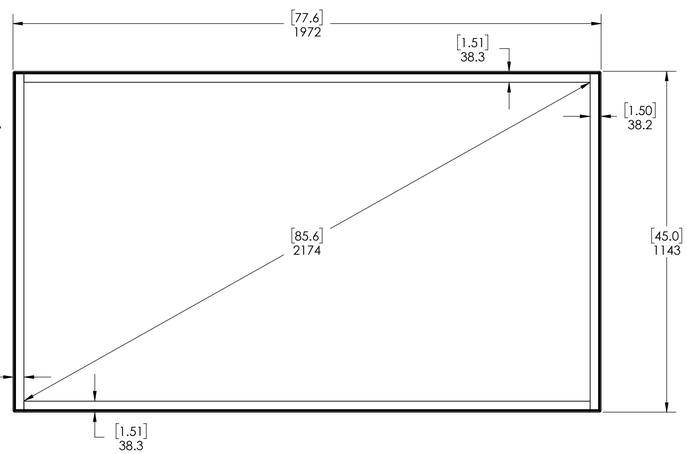

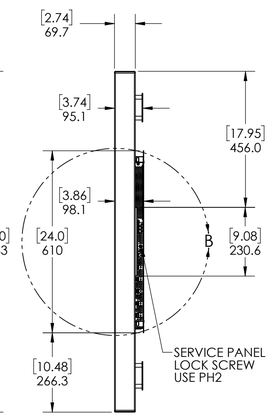

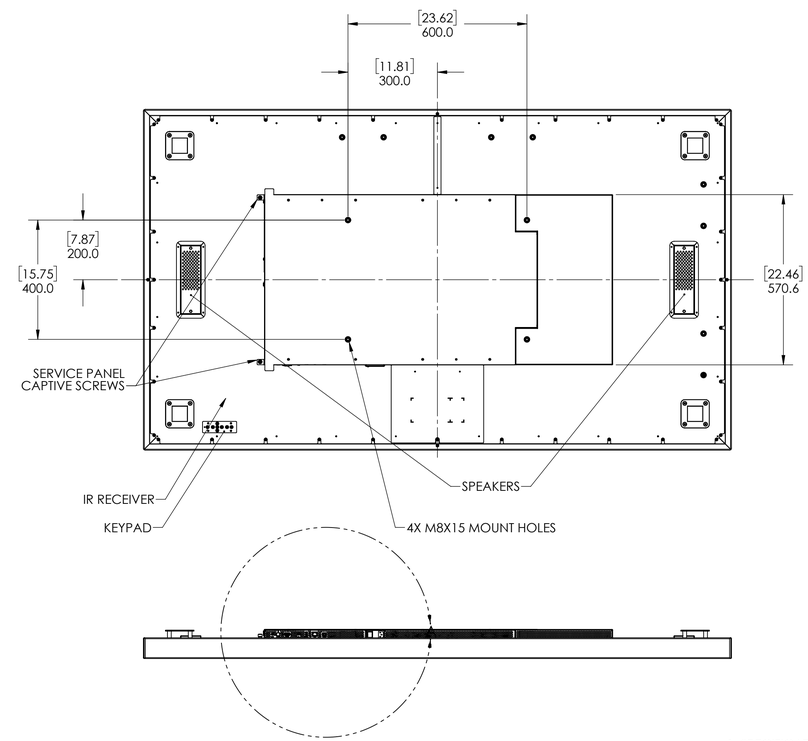

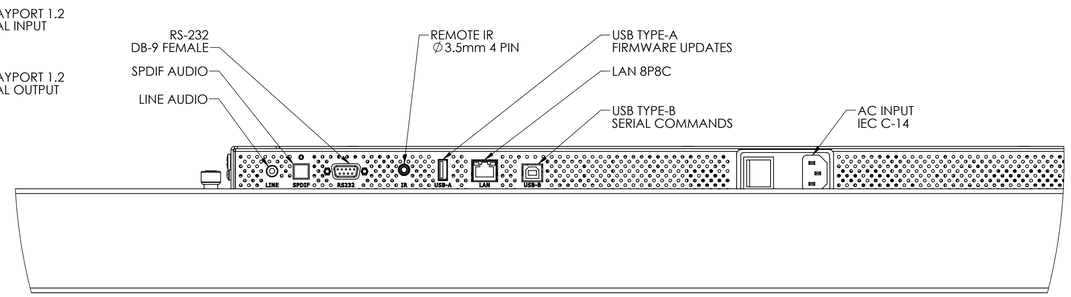

DETAIL A
SCALE 1 : 2
I/O PANEL

1. SPECIFICATIONS SUBJECT TO CHANGE WITHOUT NOTICE.

NOTES: UNLESS OTHERWISE SPECIFIED

UNLESS OTHERWISE SPECIFIED DIMENSIONS ARE IN MILLIMETERS [INCHES].

TOLERANCES:

X= ±1 XX= ±.25

X= ±.5 ∠= ±1°

DIMENSIONING AND TOLERANCING PER ASME Y14.5M-1994

THIRD ANGLE PROJECTION

ENGR BY
DRAWN BY
CHECKED BY
USED ON
MATERIAL
FINISH

THIS DRAWING CONTAINS INFORMATION PROPRIETARY TO PLANAR SYSTEMS, INC. ANY REPRODUCTION IN PART OR WHOLE WITHOUT THE WRITTEN PERMISSION OF PLANAR SYSTEMS IS PROHIBITED. THIS DRAWING IS SUPPLIED FOR INFORMATION, IDENTIFICATION, ENGINEERING, EVALUATION, AND/OR INSPECTION PURPOSES ONLY AND MAY NOT BE USED AS BASIS FOR THE MANUFACTURING OF PRODUCTS OR THE FURNISHING OF SERVICES TO PLANAR SYSTEMS OR TO ANY THIRD PARTY UNLESS AUTHORIZED IN WRITING BY PLANAR SYSTEMS.

PLANAR SYSTEMS, INC.
1195 NW COMPTON DRIVE
BEAVERTON, OR 97006 USA

TITLE
UR8651-MX TOUCH OUTLINE

SIZE	PART NO.	DRAWING NO.	REV
D	-	-	

SCALE 1:10 DO NOT SCALE SHEET 1 OF 1